TECHNICAL INFORMATION

BUZZ RACK

SCORPION PRO2

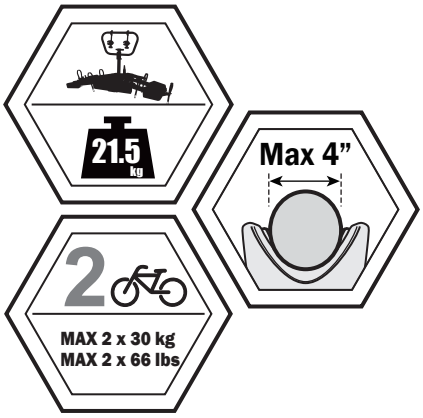

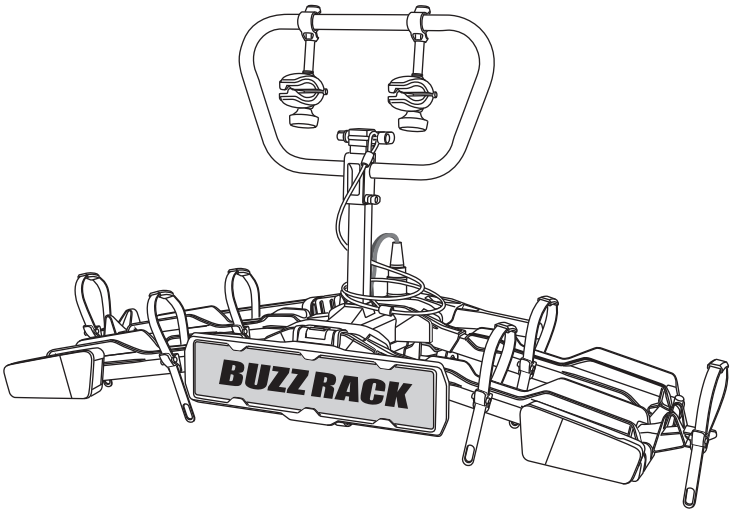

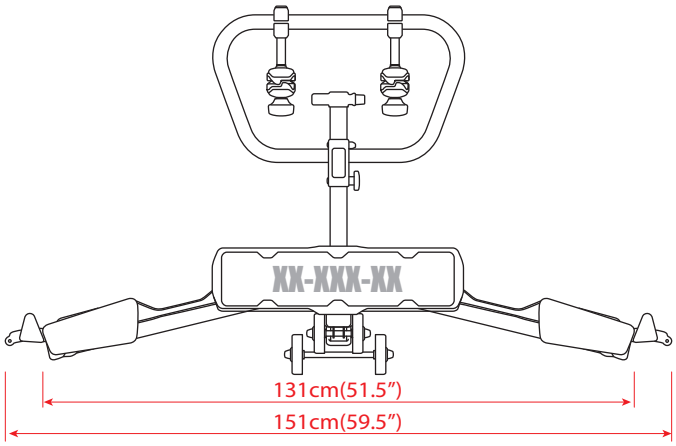

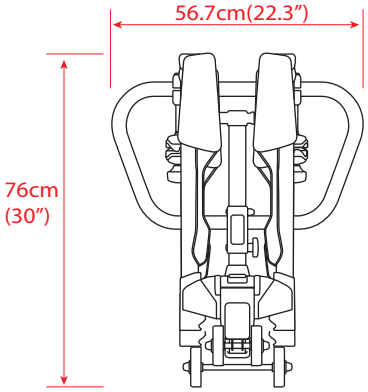

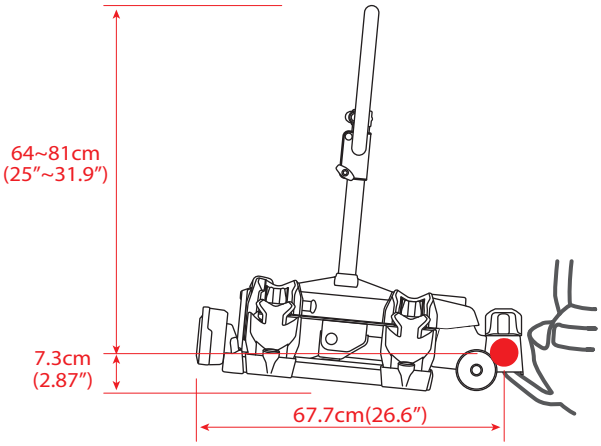

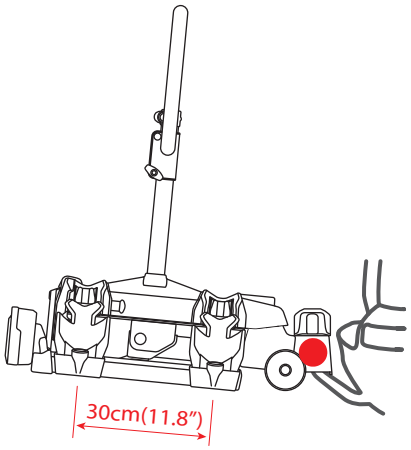

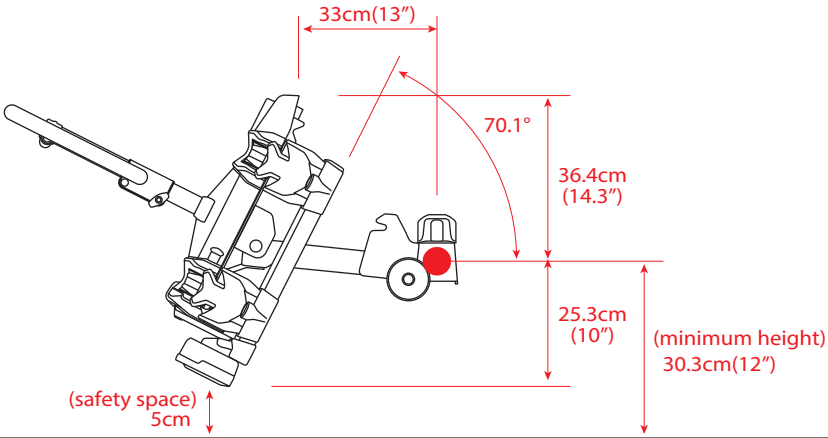

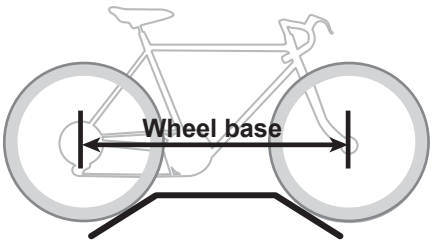

26" Tire diameter	29" Tire diameter
MAX 137.5cm(54")	MAX 139.3cm(54.8")

2024-04-12